5. REMOVE AND INSTALL HOUSING

REMOVE

1. Reinstall tilt lever and place column in full "UP" position.
2. Remove tilt spring and pivot pins.
3. Remove housing by pulling upward on tilt lever and pull housing upward until it stops. Move housing to the right to disengage rack from actuator.
4. Remove tilt lever.
5. Remove parts as shown.

INSTALL

1. Install parts as shown.
2. While holding up on tilt lever to disengage lock shoes install over steering shaft. Move rack downward and hold. Tip housing to the left until rack engages pin on actuator rod. Push housing down until pivot pin holes are in alignment.

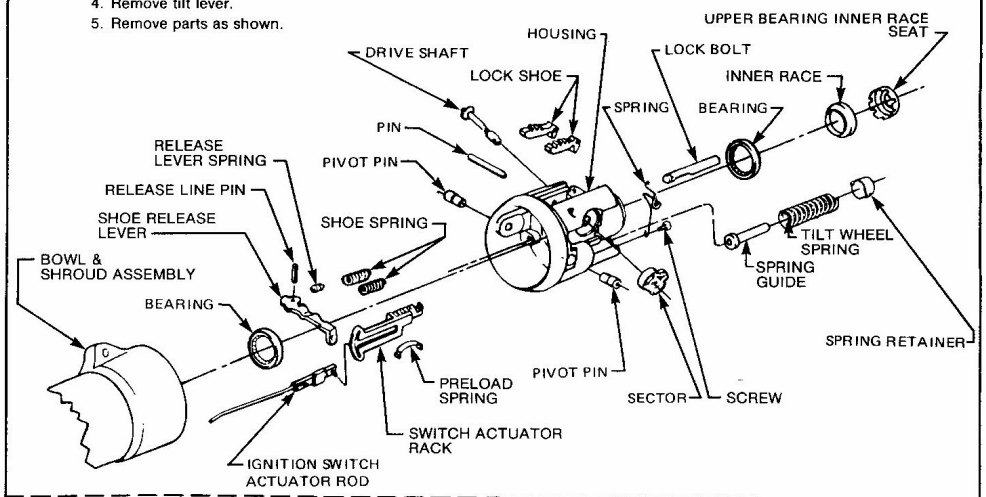

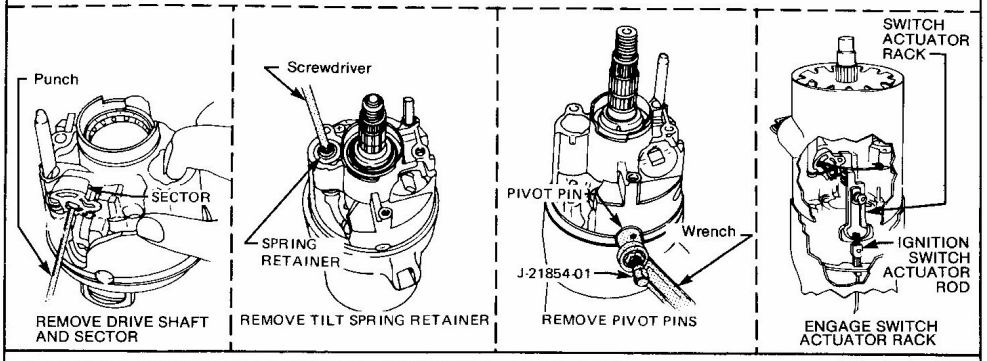

6. REMOVE AND INSTALL LOWER STEERING SHAFT ASSEMBLY

REMOVE

1 Remove parts as shown.

INSTALL

1. Install parts as shown.

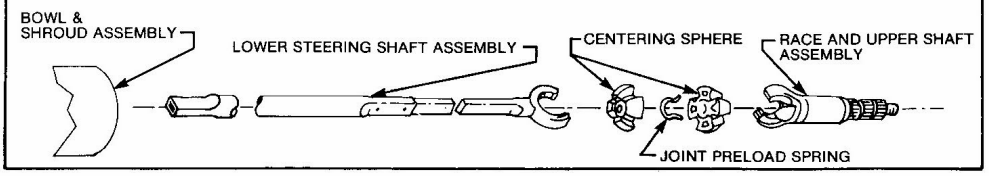

Revised: 21MR2009